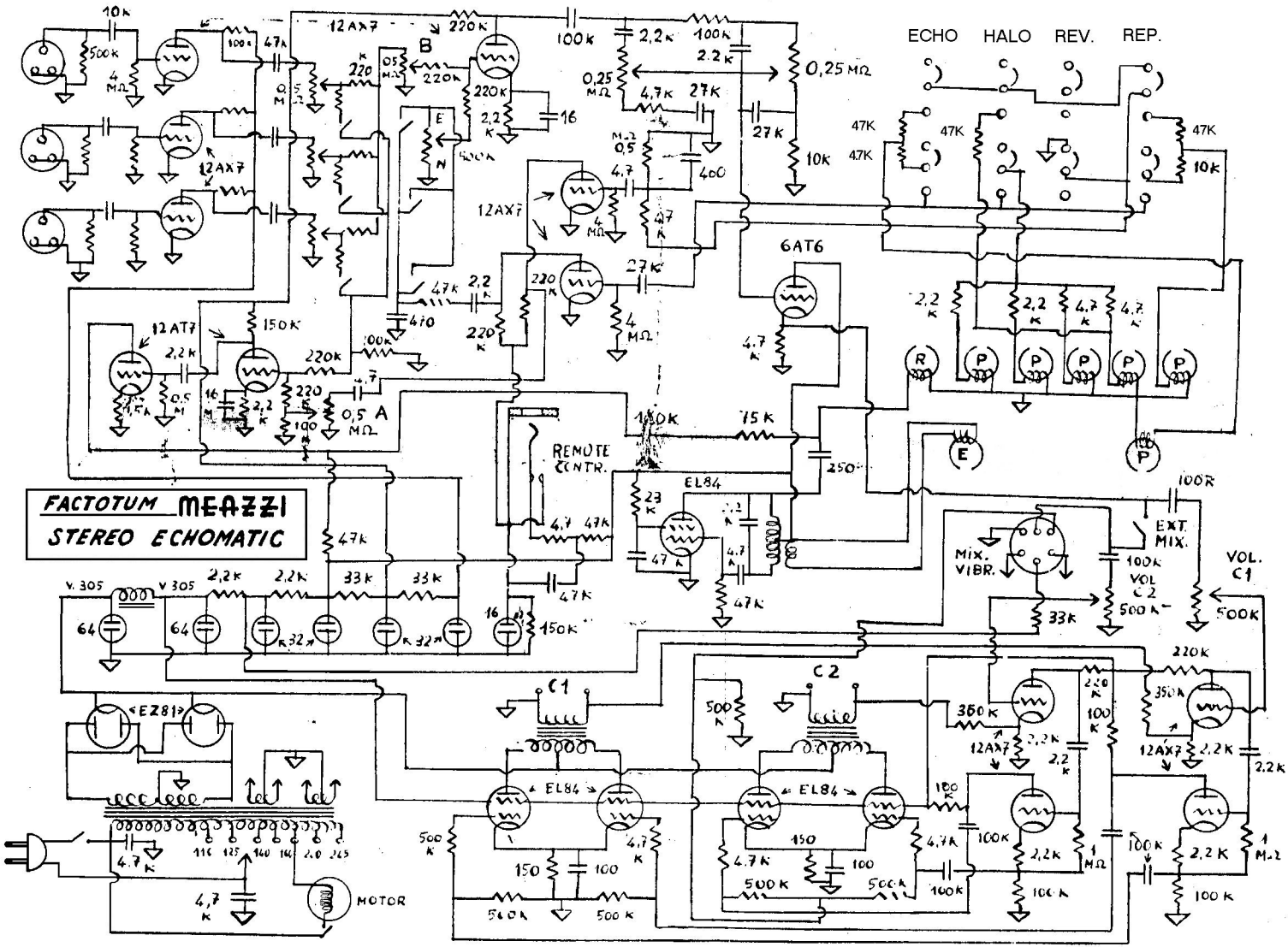
FACTOTUM MEAZZI
STEREO ECHOMATIC
ECHO
HALO
REV.
REP.
12AX7
12AT7
6AT6
EL84
EZ81
REMOTE CONTR.
EXT. MIX.
MIX. VIBR.
VOL. C1
VOL C2
MOTOR
V. 305
C1
C2

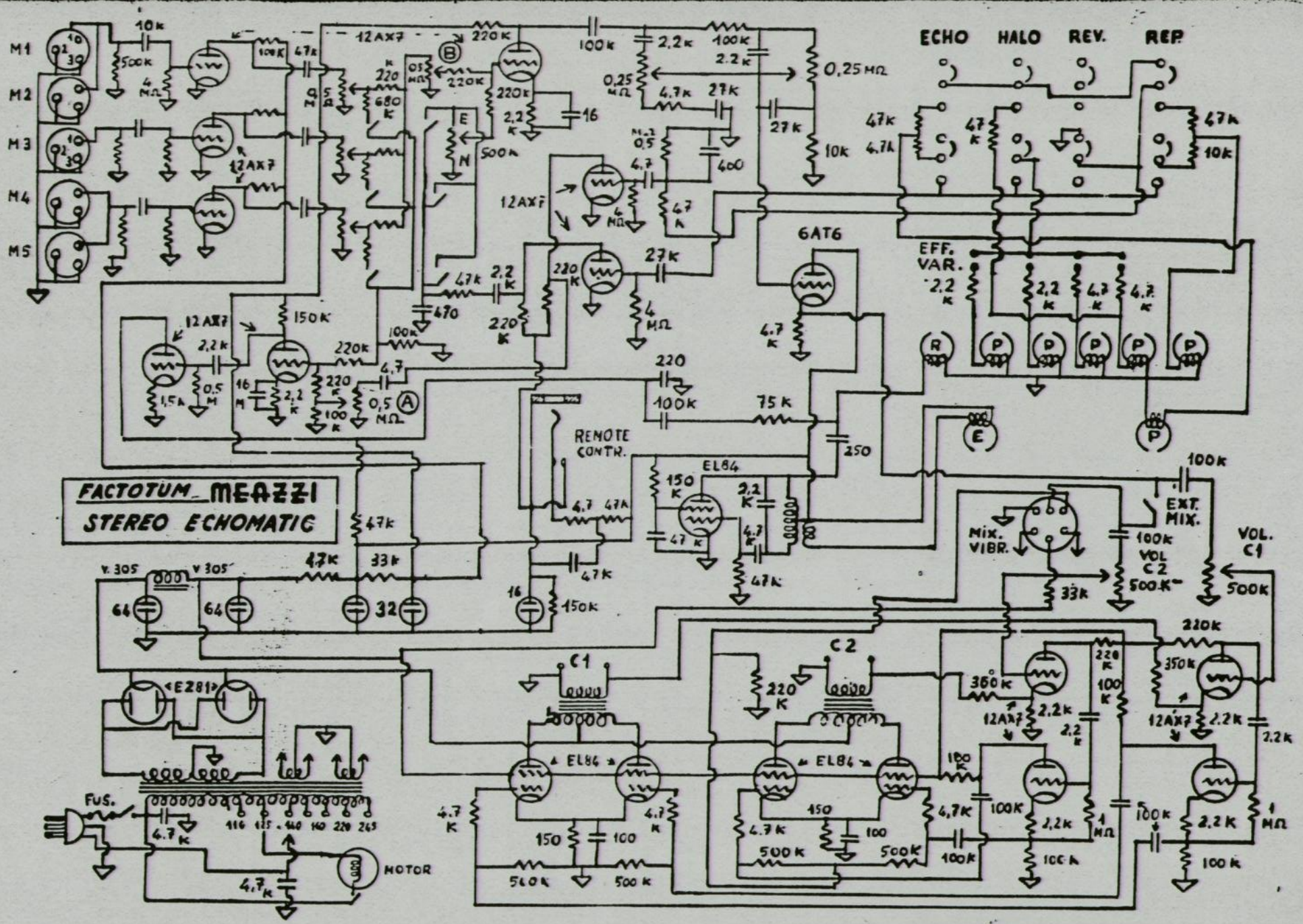
FACTOTUM MEAZZI
STEREO ECHOMATIC
ECHO
HALO
REV.
REP.
EFF. VAR.
REMOTE CONTR.
EXT. MIX.
MIX. VIBR.
VOL. C1
VOL C2
MOTOR
FUS.
12AX7
6AT6
EL84
EZ81
V 305
M1
M2
M3
M4
M5